Project Management

Project Definition

Project Description Sheet

Doc. Name:			
O3149-IPS-05-0001-PDS-Project Description Sheet			
Cross Reference Customer:			
Customer:	**Project phase:**	**Issue:**	
Brussels Airport Company		Issue For Concept	
Company:	**Document Type:**	**Revision:**	**Date:**
Group-IPS		0.0	2025-02-20

Author:	**Checker:**	**Approbator:**	**Validator:**
Damien Claude	Bram Puttemans	Emmanuel Vandecasteele	Dimitri De Schrijver

CONFIDENTIAL – Any disclosure of this information is strictly forbidden without IPS prior authorization

Document History						
Rev	Author	Checker	Approbator	Validator	Date	Change Description
00	DCL	BPU	EVD	Dimitri De Schrijver	2025-02-20	Issue For Review

Remarks:

- **All HOLD points are identified with yellow indication. Further clarification are required on these topics to freeze the scope of the project.**

Structure of this Document

1 Introduction 6
2 Glossary 6
3 References 7
4 Project Scope Description 8
4.1 Substation types and tagging convention 8
4.2 Replacement OSA-OSB-OSD 10
4.2.1 Electrical scope 11
4.2.2 Architectural, Civil and structural scope 12
4.2.3 HVAC scope 13
4.2.4 Fire protection scope 14
4.3 Replacement BIAC 15
4.3.1 Electrical scope 15
4.3.2 HVAC scope 16
4.3.3 Fire protection scope 16
4.3.4 Architectural, Civil and structural scope 16
4.3.5 GTN scope 17
4.4 Replacement B1-B2-B3 17
4.4.1 Electrical scope 18
4.4.2 HVAC scope 19
4.4.3 Fire protection scope 21
4.4.4 Architectural and Civil scope 22
4.4.5 GTN scope 31
4.5 Replacement T1-T2-T5 32
4.5.1 Electrical scope 34
4.5.2 HVAC scope 34
4.5.3 Fire protection scope 35
4.5.4 Architectural, Civil and structural scope 36
4.5.5 GTN scope 38
4.6 Demolition of B4 and T3 39

5 Electrical - Basis of Design 40
5.1 Norms and Standards 40
5.2 Preferred suppliers 40

5.3 Calculation and Design Basis 40
5.3.1 Description of the current situation 40
5.3.1.1 Principle Terminal Buildings 41
5.3.2 Electrical Management System GTN 43
5.3.3 Priority levels 47
5.3.4 Critical- and Safety circuits 47
5.3.5 TN-S Ready switchgear 48
5.3.6 Calculation basis 50
5.3.7 Replacement cables 50

6 Architectural and Civil - Basis Of Design 51
6.1 Norms and Standards 51
6.1.1 Brussels Airport Standards 51
6.1.2 Eurocodes (European Structural Standards) 51
6.1.3 Belgian Regulations 51
6.1.4 Airport-Specific Standards 51
6.1.5 Accessibility 52
6.2 Preferred suppliers 52
6.3 Assumptions 53

7 HVAC & Utilities - Basis Of Design 53
7.1 Norms and Standards 53
7.1.1 Brussels Airport Standards 53
7.1.2 Belgium Norms and Standards 53
7.2 Preferred suppliers 53
7.3 Calculation and Design basis 54
7.4 Assumptions 54

8 Fire protection – Basis Of Design 54
8.1 Norms and Standards 54
8.1.1 Brussels Airport Standards 54
8.1.2 Applicable norms and standards 54
8.2 Preferred suppliers 55

1 Introduction

The project involves replacing 9 substations that have reached their end of life at Brussels Airport. It will encompass high voltage (HS) and low voltage (LS) levels up to ALSB level. The replacement will be conducted in phases, substation by substation, from 2025 to 2028. This replacement also presents an opportunity to enhance reliability by introducing backup "fil rouge substations" capable of providing additional redundancy.

The project involves replacing the following substations:

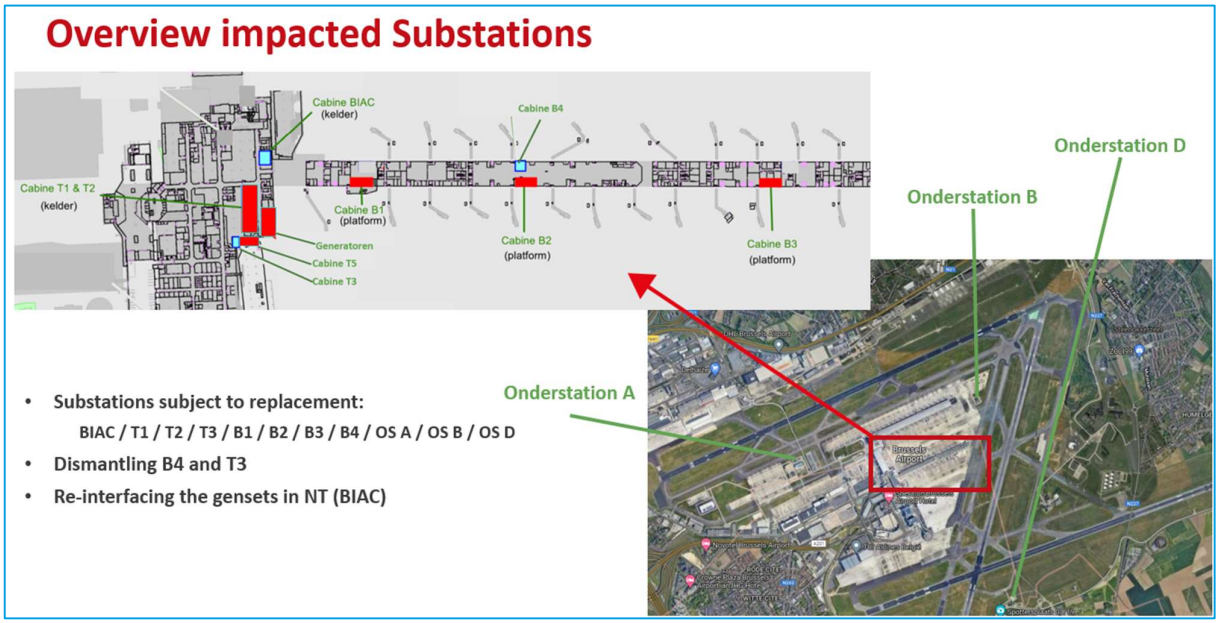

Figure 1: Substations within the project scope

2 Glossary

- ALSB: Algemeen Laagspanningsbord - General Low Voltage Board (=first distribution board downstream of the distribution transformers)
- AREI: Algemeen Reglement op Elektrische Installaties - General Legislation on Electrical Installations
- ATS: Automatic transfer switches
- BAC: Brussels Airport Company NV
- GTE: Gestion technique Electricité, oud stuursysteem voor elektrische distributie in de Terminal gebouwen - Technical management Electricity, old control system for electrical distribution in the Terminal buildings

- GTN: Gestion technique “Network”, nieuw stuursysteem voor elektrische distributie in de Terminal gebouwen - Network Technical management, new control system for electrical distribution in the Terminal buildings
- GTV: Gestion technique Visualisatie hoogspanningsnet - Technical management High-voltage grid visualization
- HIF: Alarm Management System of BAC
- HS: Hoogspanning (11kV) - High Voltage
- HV: High Voltage
- LS: Laagspanning - Low voltage
- LV: Low voltage
- PE: Protective Earth
- PEN: Protective Earth and Neutral
- PLC: Programmable Logic Controller
- RF: Fire Rated
- SAT: Site Acceptance Test (= test on site)
- SCADA: Supervisory Control And Data Acquisition
- TGBT: Main low voltage switchboard

3 References

- O2272-06_Lay-out Replacement Substations_2022.02.23
- O2272-BAC-T1-T2_Single line concept_R2.0_2022.02.22
- O2734-06D.01.03 Migration strategy B1-B2-B3-T1-T2_2023.09.26

4 Project Scope Description

4.1 Substation types and tagging convention

As we are operating in critical environments, operating 24h/24h, a BUILT-BEFORE-DEMOLISH approach will be applied. The conceptual layouts and the document "O2734-06D.01.03 Migration strategy B1-B2-B3-T1-T2" are representing this strategy where we will completely build and test the new installation before we make the final transfers of the low voltage users to afterwards demolish and evacuate the actual installation.

The next chapters represent the detailed description of the project scope. We have decided to split this in 3 types of substations:

- Non-terminal buildings:
  - OSA-OSB-OSD-BIAC: Substation where the actual infrastructure (electrical rooms) has sufficient place available to install the new equipment. Refurbishment of HVAC systems required but very limited scope for civil and fire protection.
- Terminal buildings:
  - BIAC: Substation where the actual infrastructure (electrical rooms) has sufficient place available to install the new equipment. Very limited scope for civil, HVAC and fire protection
  - B1-B2-B3: Substations where we will need to build new electrical rooms before we can remove the actual equipment in order to re-use the actual substation to host the fil rouge substations.
  - T1-T2: Substation where complex sequencing is applicable on the actual available surface and additional compartmentation will be implemented.

Note that the load balance calculation of the conceptual phase was performed on high level assumptions. The total measured consumption of each transformer has been distributed over the quantity of feeders of the different priorities (see chapter 5.3.2). A re-calculation of the load balance needs to take place during the basic design to crystalize the priority definitions and the final load balance of the new distribution transformers.

The following convention for the new substations will be applied:

Substation	Room tag	Remark
OSA	OSA-LV	
	OSA-HV	
OSB	OSB-LV	

	OSB -HV	
OSD	OSD-LV	
	OSD HV	
B1	B1-HV	
	B1-TFO	
	B1-LV	
B2	B2-HV	
	B2-TFO	
	B2-LV	
B3	B3-HV	
	B3-TFO	
	B3-LV	
B5	B5-HV	Fil Rouge substation for B1 (To be clarified if we keep one FR substation for each pier B substation or if we keep B4 as main FR substation and install new HV cables between B4 and B1/B2/B3)
	B5-TFO	
	B5-LV	
B6	B6-HV	Fil Rouge substation for B1 (To be clarified if we keep one FR substation for each pier B substation or if we keep B4 as main FR substation and install new HV cables between B4 and B1/B2/B3)
	B6-TFO	
	B6-LV	
B7	B7-HV	Fil Rouge substation for B1 (To be clarified if we keep one FR substation for each pier B substation or if we keep B4 as main FR substation and install new HV cables between B4 and B1/B2/B3)
	B7-TFO	
	B7-LV	
T1	T1-HV	
	T1-TFO	
	T1-LV	

T2	~~T2-HV~~	Extension on T5
	T2-TFO	
	T2-LV	
T5	T5-HV	Installation of new 11kV switchgear and transformers (replacement T2)
T7	T7-HV	Fil Rouge substation for T1 and T2
	T7-TFO	
	T7-LV	

4.2 Replacement OSA-OSB-OSD

The substations OSA, OSB, and OSD have a similar configuration and a high level of redundancy:

- The Transformers are redundant
- The No-Break systems are redundant.
- Automatic transfer switches (ATS) are in place for automatic transfer.
- OSA, OSB and OSD are principal switching substations and connected to PL3, this principal loop transports power from 038 to 309 and vice versa

This configuration will be maintained in the new installation, except for the integration of the distribution level into the main low-voltage distribution panels (ALSB/TGBT).

Fireproof compartmentalization between the transformers and the ALSBs is not planned in this project.

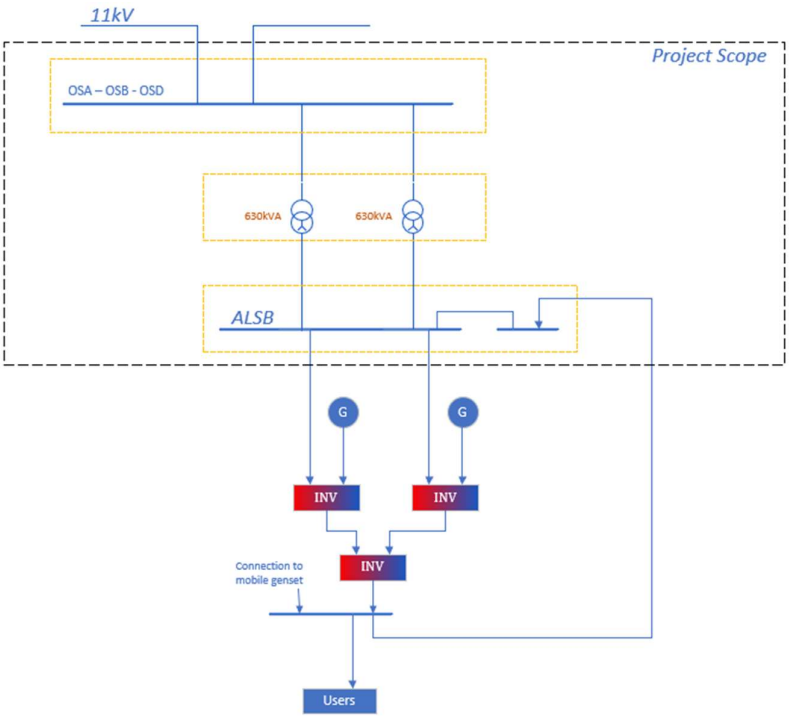

4.2.1 Electrical scope

The electrical scope consists of:

- Supply and installation of new 11kV switchgear, distribution transformers and ALSB's (incl. interconnecting cabling works)
- 11kV cabling works to integrate the new 11kV switchgear in the network –
- connection of the new substation to the new PL3 (PL3 new is in the scope of Stragrid)
- Connect and test pilot wires for logical selectivity
- Cable transfers from the existing ALSB to the new ALSB's
- Cut, extend and/or reconnect all cca cables (Is this included in the project scope?)
- Replace all eca cables for the sections that are not underground (Is this included in the project scope?)
- Taking out of service, dismantling and evacuation of old 11kV switchgear, distribution transformers, ALSB's and cables (incl. cable junctions of 11kV cables)
- Necessary works to integrate the new installation in the supervision- and control system GTV or GTG
- Test of the equipment using low-voltage auxiliary power supplies.

- Modifications on lighting in the electrical room

4.2.2 Architectural, Civil and structural scope

As this group of substations is located within the surrounding facilities of the airport, the CSA scope is relatively less critical compared to the other substations. Nevertheless, certain actions must be undertaken to ensure the proper execution of the work.

Structural and Architectural assumptions:

- Floor and Wall Repairs are **not included** in the scope of the project:
  - Repair cracks and damaged areas (burns, impact marks) to restore structural integrity.
  - Apply fire-resistant coatings where necessary
- Slab Reinforcement:
  - Assess the load-bearing capacity of existing slabs to support new equipment when necessary
  - Strengthen or replace slabs if structural integrity is compromised.
  - Floor openings for cable passings will need to be carefully scheduled and verified with a structural analysis on feasibility.
- Floor reparations after the dismantling phase
- Height and Access Adjustments:
  - Modify access points (doors, openings) to facilitate installation and maintenance of electrical/HVAC equipment (if required)
  - Ensure compliance with fire safety and emergency evacuation requirements.
- Equipment Foundations & Fixations:
  - Removal and newl reinforced concrete bases where required for large electrical panels or HVAC units (if necessary)

- Drainage & Waterproofing:
  - Ensure proper drainage around substations to prevent water infiltration.
  - Apply waterproofing treatments (if necessary)
- Floor coverings: isolating finishes (if required):

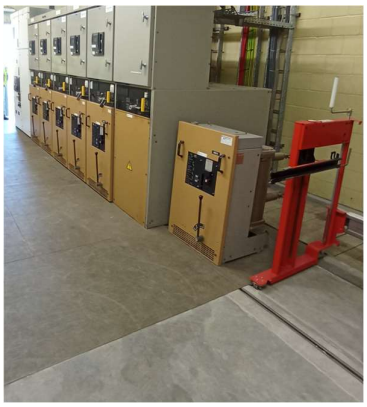

4.2.3 HVAC scope

The HVAC scope consists of:

- Dismantling/replacing of the existing intake grids with filters and the extractors on the roof

- The electrical rooms will be cooled using outside air through ventilation hatches (natural or forced) with filters. The new systems will not be installed on the roof to increase accessibility for maintenance.
- New HVAC electrical & control panel (including connection to the Alarm Management system):

- New electrical heater (if required):

Redundancy on the ventilation equipment is not provided.

Specific note : the aligned requirements during the site visit are not fully aligned with the global technical specifications of Brussels Airport Company. The document "*Standaard Basisontwerp 11kV installaties niet terminal cabines*" is defining the requirement to install split units or Air Handling Unit to ensure a maximum temperature of 35°C. This proposed solution with ventilation as cooling cannot guarantee this setpoint. The solution without split unit but with forced ventilation is however seen as acceptable for IPS, limits the cost (no budget was foreseen in the feasibility budget) and is more reliable then split units.

4.2.4 Fire protection scope

The fire protection scope consists of:

- Modifications of the fire detection systems aligned with the new layouts
- Fire compartmentation:

- Upgrade fire-resistant materials of the existing walls, ceilings, and floors, particularly in the technical room, which must comply with both fire safety and operational safety standards. Apply fire-resistant coatings on exposed structural elements if necessary (To be confirmed).
- Installation/replacement of fire resistant doors (REI30) and self-closing to maintain compartmentalization.
- Fire sealings of openings in walls and slabs with firestop systems to prevent the spread of fire and smoke. Fire-resistant doors, windows, dampers, and fire dampers (clapets) must be installed as required.

- Ensure that fire escape routes are clearly defined and compliant with local regulations and check that signalization and emergency lighting are aligned with these escape routes
- No automated fire extinguishing systems will be provided in this project. During the site survey of 27-02-2025, Fire extinguishers were present in the electrical rooms. The project does not provide further analysis on these.
- Replacing wooden floors in OSA and OSD by steel structure support to reduce fire load of the room (Optional)

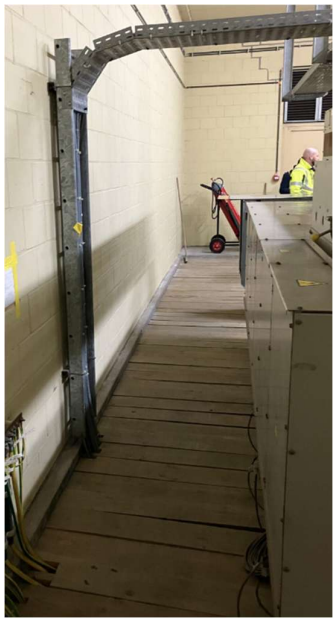

4.3 Replacement BIAC

4.3.1 Electrical scope

The electrical scope consists of:

- Supply and installation of new 11kV switchgear, distribution transformers and ALSB's
- 11kV cabling works to integrate the new 11kV switchgear in the network
- Cable transfers from the existing ALSB to the new ALSB's
- Taking out of service, dismantling and evacuation of old 11kV switchgear, distribution transformers and ALSB's
- Necessary works to integrate the new installation in the supervision- and control systems
- Test of the equipment using low-voltage auxiliary power supplies.
- Supply and connect High Voltage (HV) Cable Transfers
- Supply and connect Low Voltage (LV) Cable Transfers
- Looping of the new switching cells onto the main loop (38B – BIAC – OT13).
- Adjustment of the lighting according to the new layout of the 11kV switches.

4.3.2 HVAC scope

No activities provided in project scope for BIAC substation

4.3.3 Fire protection scope

No automated fire extinguishing systems will be provided in this project. During the site survey of 27-02-2025, Fire extinguishers were present in the electrical room. The project does not provide further analysis on these.

Only adaptations of fire detection systems according to the new layouts are included in the scope for BIAC.

4.3.4 Architectural, Civil and structural scope

These substations are located within the surrounding facilities of the airport. Their current condition, although varying from one to another, is similar in terms of wear and aging—factors that are noticeable at first glance but are not critical to their proper operation currently, aside from a few specific fire safety interventions (detailed in the Fire Chapter) that must be promptly addressed to ensure compliance with current regulations.

Damaged floors and walls (cracks and burns), existing slabs, and potentially limited space in terms of access and height must be analysed on a case-by-case basis according to the equipment's size and operational requirements but are not

explicitly part of the project scope (To be confirmed by BAC if we integrate it – In this case, we recommend to order an analysis from SECO).

The Civil scope for this room is very limited in BIAC:

- Slab Reinforcement:
  - Assess the load-bearing capacity of existing slabs to support new equipment when necessary
  - Strengthen or replace slabs if structural integrity is compromised.
- Floor openings for cable passings will need to be carefully scheduled and verified with a structural analysis on feasibility.
- Floor reparations after the dismantling phase

4.3.5 GTN scope

BIAC has already been transferred partially to the GTN. The following scope is required within the project

- Extension of the existing GTN cabinet, programming and SCADA to include all 11kV breakers in the GTN
- Re-interfacing the 11kV breakers from the existing switchgear to the new BIAC switchgear. This will need to be organized very detailed as it included also the interfaces with the breakers of the Emergency generators.

4.4 Replacement B1-B2-B3

The substations B1-B2-B3 have a similar configuration.

The project ensures a high level of redundancy:

- Due to dual incoming feeds on ALSBs with automatic switching
- The installation of limited automated breakers to increase reliability (only incoming breakers of the ALSB's)
- The installation of different fire compartments for high voltage switchgear, transformers, and low voltage switchgear.
- The installation of a "Make-before-break" transfer function for maintenance activities

Integration into the new GTN control system (standardized and tested sequences available)

4.4.1 Electrical scope

The electrical scope consists of:

- Supply and installation of new 11kV switchgear, distribution transformers and ALSB's
- 11kV cabling works to integrate the new 11kV switchgear in the network
- Cable transfers from the existing ALSB to the new ALSB's
- Taking out of service, dismantling and evacuation of old 11kV switchgear, distribution transformers and ALSB's
- Conversion and reprogramming of the available GTN control panel by replacing the previous substation.
- Reuse and connect to network of the optical fiber patch panel.
- Necessary works to integrate the new installation in the supervision- and control systems
- Test of the equipment using low-voltage auxiliary power supplies.
- Supply and connect High Voltage (HV) Cable Transfers
- Supply and connect Low Voltage (LV) Cable Transfers
- Looping of the new switching cells onto the main loops.
- Adjustment of and new lighting according to the new layouts.

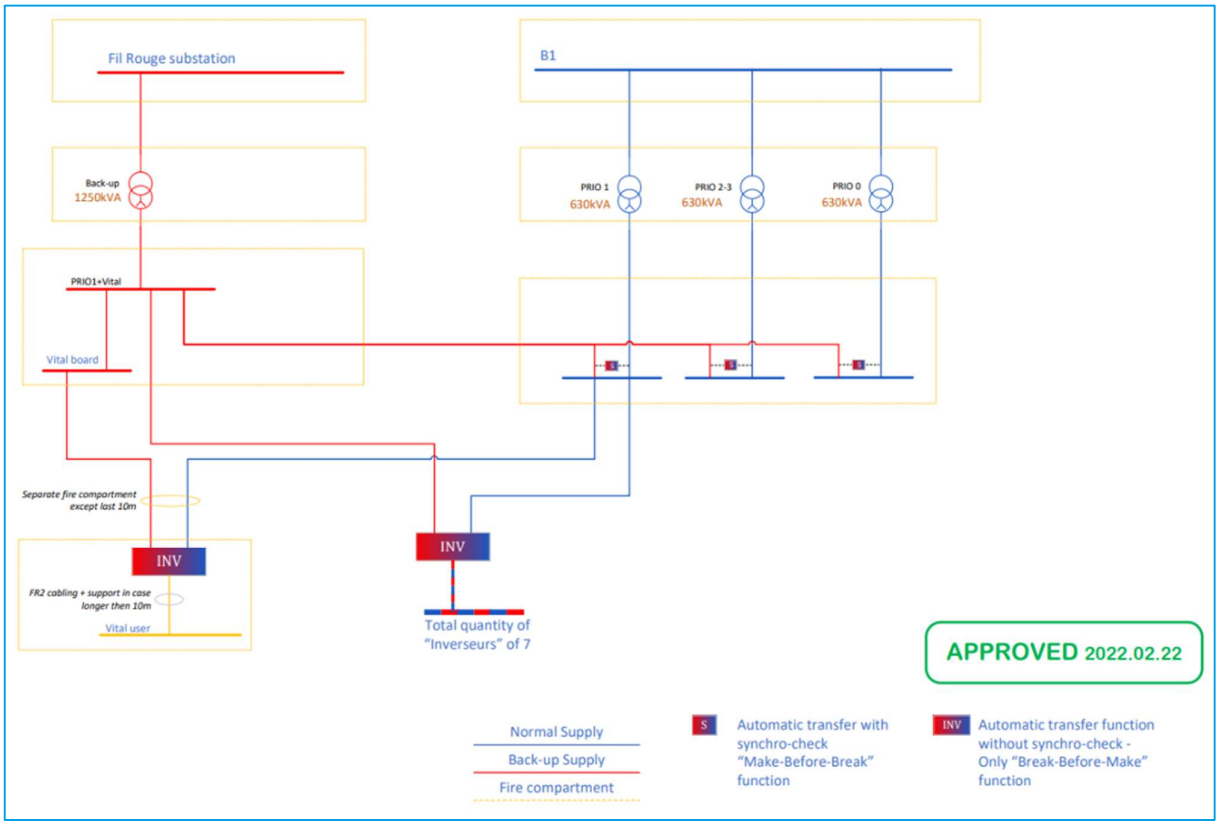

4.4.2 HVAC scope

The HVAC scope consists of:

- New HVAC units will be provided for each substation (B1, B2 and B3): the assumption is to apply cooling through forced ventilation, but calculations will be performed in basic design to check. If needed, additional local split units will be provided to assure the cooling capacity. Fire dampers will need to be provided on ducting through fire walls and connected to the fire detection system. Temperature- and humidity measurements will be foreseen in each room, cabled to the new HVAC panel and alarms will be made available on contacts.
- New HVAC electrical & control panel (including connection to the Alarm Management system).
- For the realization of the substations, some utilities will need to be rerouted:
  - B1: Utility line to the degreaser to increase free height:

- B1: Several water evacuation lines which the project prefers not to reroute. Watertight (and walkable ceiling to be provided).

- B2: Passenger area (utilities and HVAC ducting above false ceiling and in walls, incl. sprinklers): No detailed information available at this point.

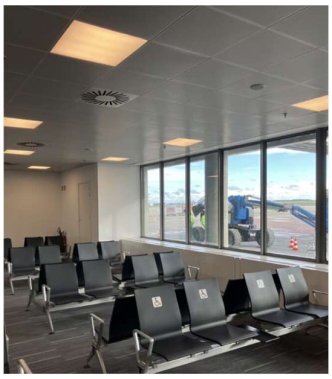

- B2-Basement: more detailed analysis is required to defined the impact of the installation of electrical room in the basement. Potential relocation required of the equipment against the wall to enable the realization of a 11kV switchgear room.

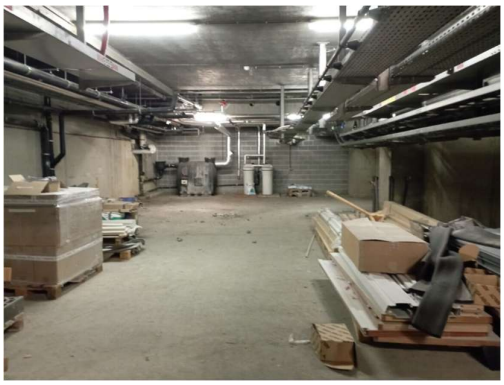

- B3: sprinklers to be rerouted to clear the space for electrical room installation + some equipment to be displaced:

- Location of the HVAC equipment will be determined during the basic design phase.

Specific note : the aligned requirements during the site visit are not aligned with the global technical specifications of Brussels Airport Company. The document “Standaard Basisontwerp 11kV installaties terminal cabines” is defining the requirement to install split units or environmental control unit (klimaatkasten) and electrical heaters. Additionally, the temperature setpoints are defined between 15°C and 28 °C which we cannot guarantee with only ventilation. No ventilation requirements are specified in the BAC standard. IPS proposes also another option: no ventilation and cooling/heating through split units. This removes the complexity of the ducting and fire dampers, avoids the need of electrical heater (=fire risk) and aligns with the BAC standards. This solution can be considered as a CAPEX optimization but has a higher OPEX requirement.

4.4.3 Fire protection scope

The fire protection scope consists of:

- Modifications of the fire detection systems aligned with the new layouts

- Removal/Adaptations of sprinkler systems in the B3 area (actually a garage) and the B2 area (actually a passengers waiting room) as no sprinklers should be installed in electrical rooms
- Fire compartmentation:
  - Upgrade fire-resistant materials of the existing walls, ceilings, and floors, particularly in the technical room, which must comply with both fire safety and operational safety standards. Apply fire-resistant coatings on exposed structural elements if necessary (To be confirmed).
  - New Walls/Partitions with correct fire resistance:
    - REI60 for the new walls in the basement
    - EI60 for the new partition walls on groundlevel (substation B2)
  - Installation/replacement of fire resistant doors (REI30) and self-closing to maintain compartmentalization.
  - Fire sealings of openings in walls and slabs with firestop systems to prevent the spread of fire and smoke. Fire-resistant doors, windows, dampers, and fire dampers (clapets) must be installed as required.

Note: The actual cable passages through the floor are not fire sealed. We assume that this will therefore also not be required in the final situation after the replacement. Only fire sealing on the vertical walls in between the different rooms will be provided.

- Ensure that fire escape routes are clearly defined and compliant with local regulations and check that signalization and emergency lighting are aligned with these escape routes.

4.4.4 Architectural and Civil scope

Currently used as substations, garage or waiting rooms, the future B's substations reflect different conditions and situations as described:

- B1: Located in the basement of the airport, this room is a large and elongated space currently used by contractors primarily for storage and daily maintenance operations. Its current state requires a significant upgrade in terms of

configuration, accessibility, and technical performance to be adapted for its intended use as electrical substation. Some existing elements, such as walls and piping, may be reused, while many others will need to be assessed as part of the new space design. Openings in the walls and slabs do not contains proper fireproof sealing.

- B2: Comprising two distinct areas, a technical room and a public waiting area, this substation's scope is unique compared to the others, as it involves two different functions and conditions.

  The technical room currently houses a series of fully operational technical equipment connected to the rest of the airport's infrastructure. On the other hand, the waiting area features numerous finishes designed for public use and comfort, including seating, carpets, marble (or similar) flooring, high ceilings, and windows overlooking the landing strips. Also, openings in the walls and slabs do not contains proper fireproof sealing.

- B3: Similar to the previous substation, this one consists of two separate spaces, each currently serving different functions. While their specific conditions differ, they share the common trait of not exhibiting any particularly significant damage, aside from the typical wear and tear associated with daily technical use. Their finishes are simple and well-suited to their current purpose. A variable ceiling height has been observed in the current garage, and some missing elements need to be documented in the drawings. As in the previous stations, openings in the walls and slabs do not contain appropriate fireproof sealing.

Substations B1, B2, and B3 will undergo significant modifications in terms of spatial configuration and layout, along with upgrades to meet technical area requirements. To achieve this, major adaptations and remediations may be necessary, including the removal of existing equipment, demolition of certain areas, and the construction of new technical rooms.

From an architectural, civil engineering, and structural perspective, the work will also focus on ensuring compliance with current regulatory standards, as well as maintaining the proper condition and functionality of the installations.

According to the electrical equipment specifications (dimensions, technical requirements, auxiliary systems), a maximum volume verification must be conducted for each substation, consisting of:

- Side clearances (between walls and transformers): A space of 60 cm to 1 meter is necessary to ensure safe access and ventilation.
- Front and rear clearance: Depending on the type of access and maintenance, this clearance should be 80 cm to 1.5 meters to allow personnel to safely operate and service the equipment.
- Total surface area and volume

These CSA actions will ensure that the rooms are adequately prepared for their conversion into new substations while prioritizing fire safety and functional adaptability for the upgraded electrical and HVAC systems.

4.4.4.1 B1: Basement Room

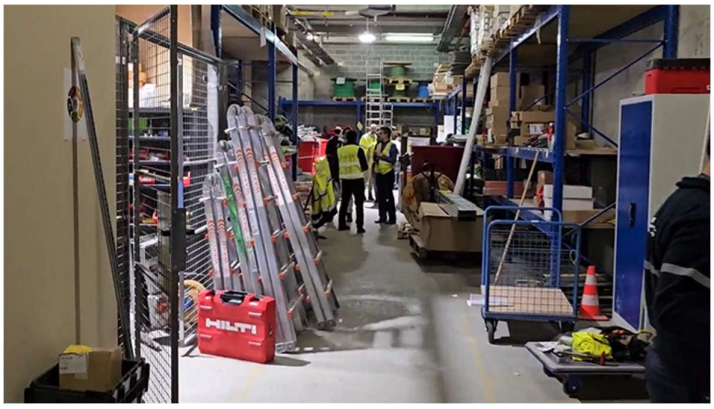

- Structural and Architectural Actions:
  - Space Reconfiguration & Adaptation:
    - Redesign the layout to optimize space for the intended use, ensuring access to new equipment and compliance with safety standards.
    - Assess the existing walls, floors, and ceilings, and remove or replace any elements that do not meet the required standards for the new installation. This includes rerouting piping and modifying other openings if necessary.
    - False floor installation for 11kV switchgear room and ALSB room
- Demolition and Reinforcement:
  - Some elements may need to be demolished or reinforced depending on the new layout, especially where structural integrity must be improved to support new technical equipment.
- Floor openings for cable passings will need to be carefully scheduled and verified with a structural analysis on feasibility.
- Floor reparations after the dismantling phase
- Accessibility Improvements:
  - Ensure that doors, windows, and other access points meet both fire safety regulations and the functional requirements of the new equipment.
  - Install appropriate fire-rated doors and compartmentalize areas if required for fire safety.

<u>Technical requirements:</u>

- Existing boundaries AS BUILT to identified and locate existing columns, walls, doors, ceiling, and other items in place (To be received from BAC)

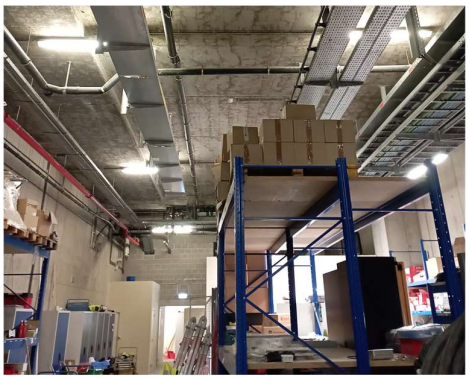

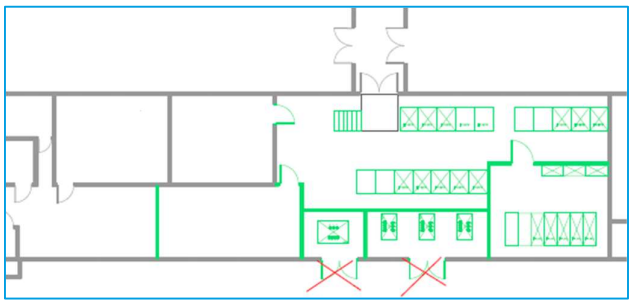

- Fire doors REI30 (To be confirmed)
- Walkable and full waterproof ceiling REI60 in basement (To be confirmed)
- Masonry walls REI60 in basement (To be confirmed)
- False floor installation of 800mm height in ALSB room and 11kV switchgear room
- Synergrid compliance to be checked but potentially not feasible to respect the requirements for the pressure resistance of wall with the actual project budget (BAC to confirm if acceptable)

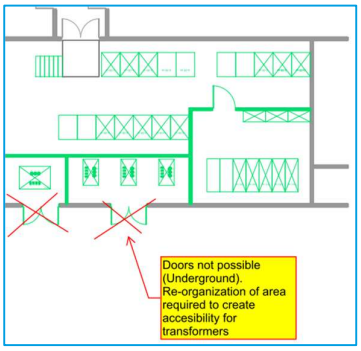

4.4.4.2 B2: Technical Room and Public Waiting Area

- Structural and Architectural Actions: Space Redesign for Dual Functionality:
  - The technical room should be adapted to support the new electrical equipment and HVAC systems, while the waiting area needs to be reconfigured to comply with new uses while.
  - Public space components such as seating, flooring, high ceilings, windows, and furniture must be removed and replaced according to the new room layout and boundaries. New finishes should match the existing waiting rooms and hallways while ensuring compliance with fire regulations. Special attention must be given to the interface between the existing and new spaces to maintain a cohesive and coordinated environment.
  - As gate access must be maintained, the new layout will incorporate its specific requirements regarding accessibility, fire safety, and all other applicable regulations.
  - No false floor installation (cable openings through floorslabs). Floor openings for cable passings will need to be carefully scheduled and verified with a structural analysis on feasibility.
- Demolition and Reconstruction:
  - As part of the conversion process, demolition may be required to remove outdated equipment and layouts that no longer serve the new purposes.
  - New openings or structural supports may be needed for the new equipment and fire safety measures.
  - Missing elements, such as structural supports or fire safety systems, need to be documented and added to the design as part of the renovation.
- Access and Ventilation:
  - Proper ventilation must be ensured for both the technical room and the public waiting area, taking into account both safety and comfort. Grilles, doors, or vents may be incorporated as needed based on the new layout and equipment requirements.

- "Enhance fire escape routes in the waiting area by installing or upgrading emergency exits and signage to ensure compliance with safety regulations.

Technical requirements:

- **Ground Floor (waiting room)**
  - Existing boundaries AS BUILT to identified and locate existing columns, walls, doors, ceiling, and other items in place (To be received from BAC)
  - Demolition:
    - Partial demolition of passenger waiting area to build part of new substation.
    - Removal of chairs, false ceiling and floor finishing.
    - Windows demolition and replacement for masonry walls (Fire resistance requirement/risk related to passengers proximity during boardings) + Façade renovation – To be confirmed

  - New electrical room (to host the new ALSB'), including:
    - Walls, doors, ceilings, ducts and any other constructive elements required in alignment with existing rooms, executed as partition elements which have EI60 fire rating
    - Estimated dimensions 14m x 8,5m. Free height of 3,5m
    - Synergrid complinace not required as only low voltage room is scheduled to be installed on ground level

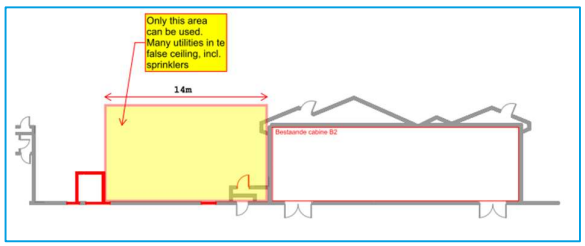

- **Basement:**

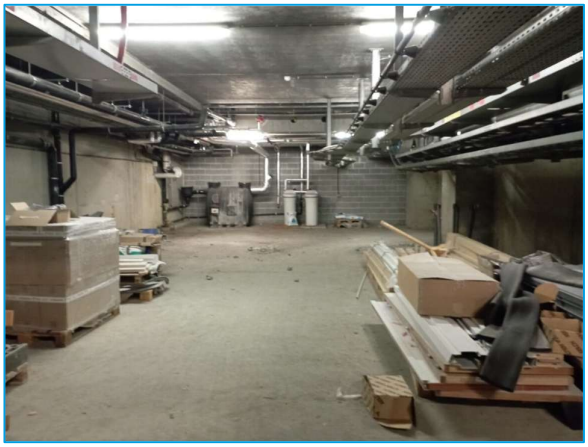

  - Floor layout, including:
    - 11kV switchgear room:
      - Fire doors REI30 (To be confirmed)
      - Masonry walls REI60 (To be confirmed)
      - Full waterproof ceiling REI60 (To be confirmed)
      - Synergrid compliance to be checked but potentially not feasible to respect the requirements for the pressure resistance of wall with the actual project budget (BAC to confirm if acceptable)
    - Development of a transformer area using fences which avoids the need of additional cooling installations
    - Estimated free height of 3,5m

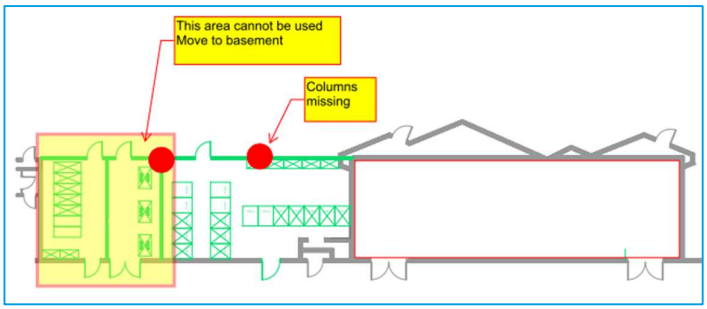

4.4.4.3 B3: Garage and Technical Room

- Structural and Architectural Actions:
  - Space Reconfiguration & Adaptation:

    - Redesign the layout to optimize space for the intended use, ensuring access to new equipment and compliance with safety standards.
    - Evaluate and ensure proper space planning to optimize room configurations for equipment access and fire safety compliance.
    - Assess the existing walls, floors, and ceilings, and remove or replace any elements that do not meet the required standards for the new installation. This includes rerouting piping and modifying other openings if necessary.
    - False floor installation for 11kV switchgear room and ALSB room (incl. staircases)
  - Ceiling and Space Adaptation:
    - The variable ceiling height must be addressed to ensure proper installation and maintenance of new technical equipment. Modifications to the ceiling may be considered to accommodate equipment and fire safety systems, such as sprinklers and smoke extraction, if required.
- Demolition and Reinforcement:
  - Some elements may need to be demolished or reinforced depending on the new layout, especially where structural integrity must be improved to support new technical equipment.
  - Any outdated or damaged structural elements should be removed or reinforced to support the new equipment and safety systems.
  - Missing elements, such as structural supports or fire safety systems, need to be documented and added to the design as part of the renovation.
- Access and Ventilation:
  - Proper ventilation must be ensured for both the technical room and the public waiting area, taking into account both safety and comfort. Grilles, doors, or vents may be incorporated as needed based on the new layout and equipment requirements.
  - "Enhance fire escape routes in the waiting area by installing or upgrading emergency exits and signage to ensure compliance with safety regulations.

As mentioned earlier, various works and assets are required for these substations to renovate and adapt each room, ensuring compliance with regulations, optimizing space functionality, and enabling the proper installation of the new equipment.

Technical requirements:

- Existing boundaries : identify and locate missing columns and walls.

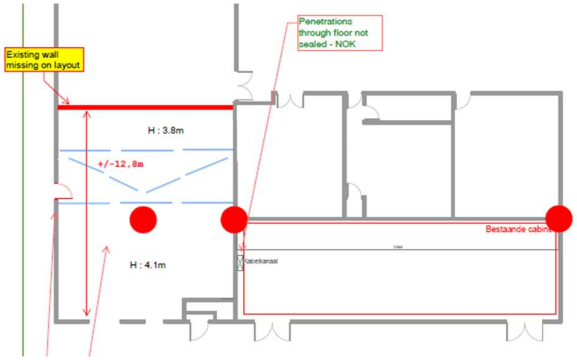

- Removal of the garage door and replacing it by new façade and acces door(s) to the substation

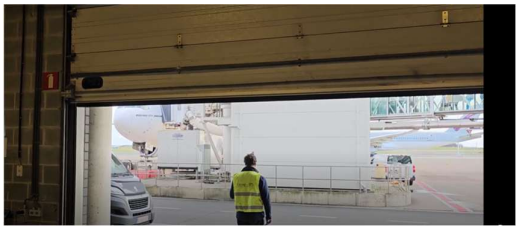

- Reallocation of equipment to clear the room:

- Coordination with the existing technical shaft (equipment?) which is recommended to keep as is:

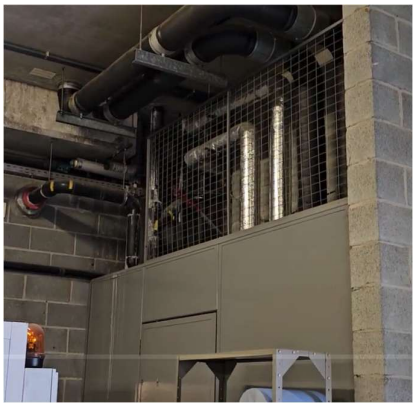

- Fire doors REI30 (To be confirmed)
- Masonry walls REI60 (To be confirmed)
- False floor installation of 800mm height in ALSB room and 11kV switchgear room
- Synergrid compliance to be checked but potentially not feasible to respect the requirements for the pressure resistance of wall with the actual project budget (BAC to confirm if acceptable)
- Estimated height: until existing ceiling - Variable Free Height : from 3.8m to 4.1m

4.4.5 GTN scope

Reference is made to chapter 5.3.2. From a high level point of view, the scope of the GTN consists of:

- A GTN control cabinet for the control and monitorring of the electrical installation (11kV switchgear, transformers, ALSB's)
- Tie-in on the optical fiber network of the GTN
- Flash beacons to indicated operational status of the network (Normal, Emergency, Priority level)
- An HMI on the control cabinet and one close to the acces door to enable operators to perform remote switching from outside the electrical room.

- Dismantling of the GTE system, excl. lighting control

4.5 Replacement T1-T2-T5

To complete the scope of work in substations T1, T2, and T5, a complex sequence of six phases will be required:

1. Initial status
2. Installation new T2 Extension substation T5 + ALSB's in T2
3. Removal old T2
4. Installation new T1 on location old T2
5. Removal old T1
6. Installation new Fil Rouge substation on location old T1+ Installation of fire compartments

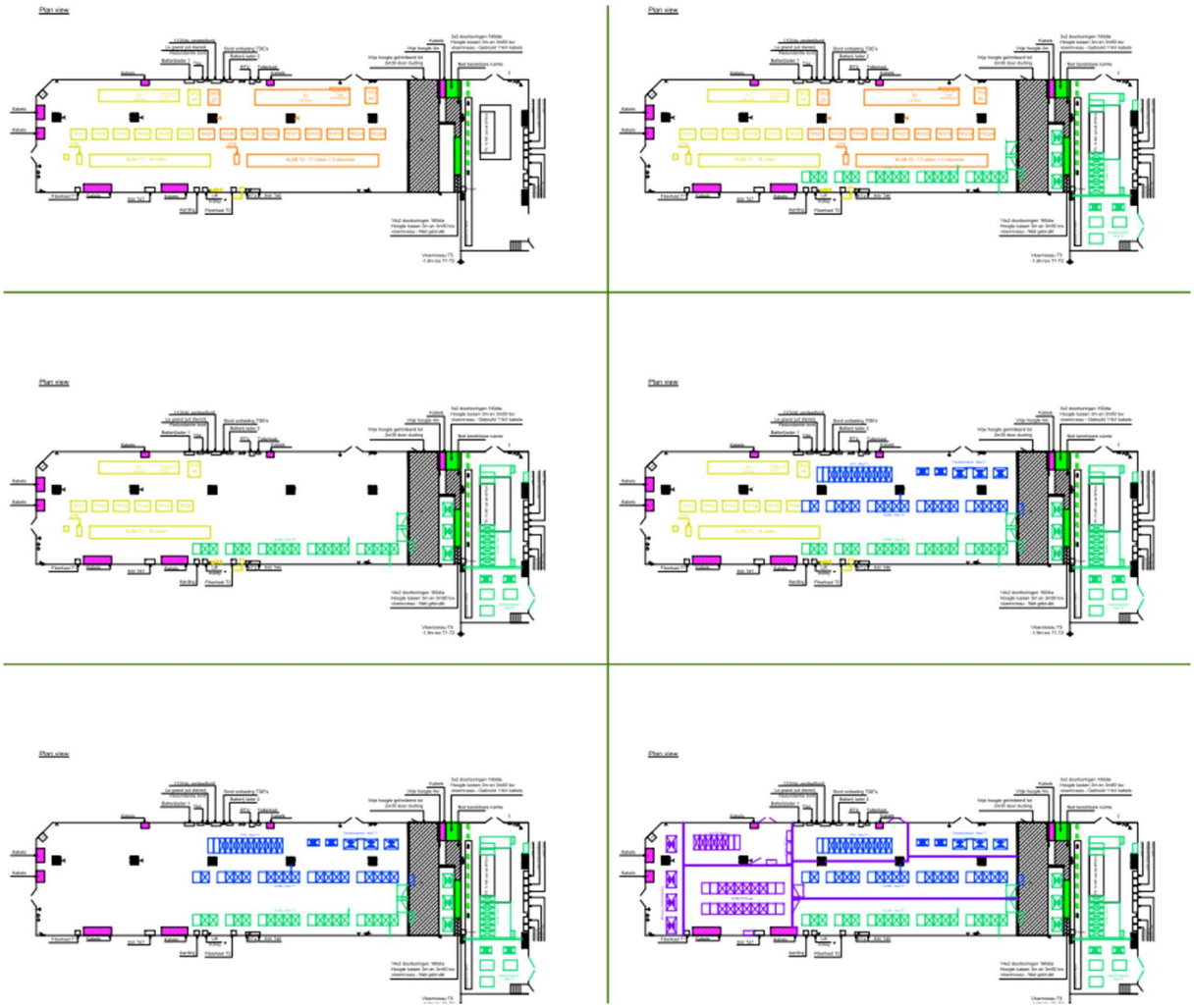

Figure 2: Complex sequencing of T1-T2

4.5.1 Electrical scope

The electrical scope consists of:

- Supply and installation of the false floor extension
- Supply and installation of new 11kV switchgear, distribution transformers and ALSB's
- 11kV cabling works to integrate the new 11kV switchgear in the network
- Cable transfers from the existing ALSB to the new ALSB's
- Taking out of service, dismantling and evacuation of old 11kV switchgear, distribution transformers and ALSB's
- Conversion and reprogramming of the available GTN control panel by replacing the previous substation.
- Reuse and connect to network of the optical fiber patch panel.
- Necessary works to integrate the new installation in the supervision- and control systems
- Test of the equipment using low-voltage auxiliary power supplies.
- Supply and connect High Voltage (HV) Cable Transfers + connection to the existing high voltage loop.
- Supply and connect Low Voltage (LV) Cable Transfers + Transfers it from the ALSB outgoing feeders
- Looping of the new switching cells onto the main loops.
- Adjustment of the lighting according to the new layout of the 11kV switches.

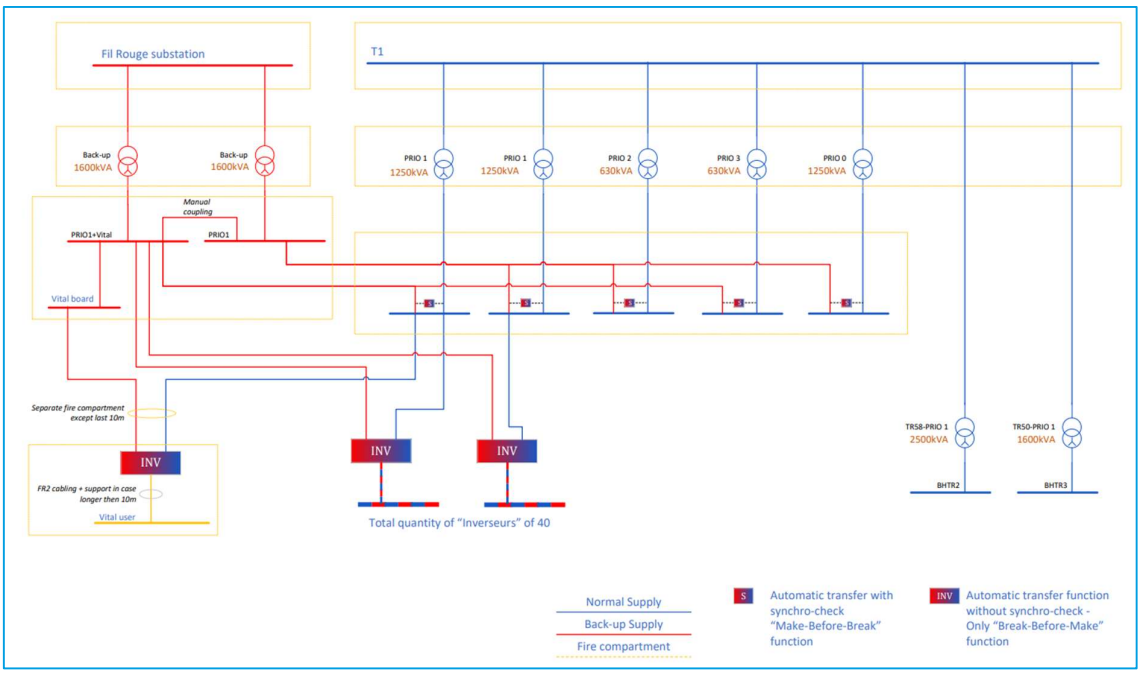

Figure 3: Single line concept for T1 (T2 is similar)

4.5.2 HVAC scope

General concept: Implement forced ventilation with temperature control to prevent overheating electrical equipment.

- Actually, fresh air through false floor and extraction through grid in walls. This concept will remain unchanged. Additional extraction duct will be provided to the different rooms in the future and connected on the existing ducts. Design of the walls will take into account as much as possible the existing intake grids in the floor.

- As much as possible existing routings will be reused
- Existing ducts will be cleaned up or replaced
- Ensure that ventilation ducts crossing fire compartments have fire dampers (EI 60 or EI 120).
- New HVAC electrical & control panel is not required
- If additional split units are required based upon the thermal load balance, this system will be independent.
- The air handling unit and ducting system will be designed to guarantee a temperature range between 15°C and 28 °C.

Specific note : the aligned requirements during the site visit are not aligned with the global technical specifications of Brussels Airport Company. The document "*Standaard Basisontwerp 11kV installaties terminal cabines*" is defining the requirement to install split units or environmental control unit (klimaatkasten) and electrical heaters. No ventilation requirements are specified in the BAC standard. IPS proposes also another option: no ventilation and cooling/heating through split units. This removes the complexity of the ducting and fire dampers, avoids the need of electrical heaters (=fire risk) and aligns with the BAC standards.

4.5.3 Fire protection scope

The fire protection scope consists of:

- Modifications of the fire detection systems aligned with the new layouts

- Smoke extraction system modifications (AS BUILT information required to understand the actual assets and their functioning), complying with NBN EN 12101-3 for smoke extraction.

- Fire compartmentation:
  - Upgrade fire-resistant materials of the existing walls, ceilings, and floors, particularly in the technical room, which must comply with both fire safety and operational safety standards. Apply fire-resistant coatings on exposed structural elements if necessary (To be confirmed).
  - New Walls/Partitions with correct fire resistance: EI60 for the new partition walls
  - Installation/replacement of fire resistant doors (REI30) and self-closing to maintain compartmentalization.
  - Fire sealings of openings in walls and slabs with firestop systems to prevent the spread of fire and smoke. Fire-resistant doors, windows, dampers, and fire dampers (clapets) must be installed as required.
  - Ensure that ventilation ducts crossing fire compartments have fire dampers (EI 60 or EI 120).

Note: The actual cable passages through the floor are not fire sealed. We assume that this will therefore also not be required in the final situation after the replacement. Only fire sealing on the vertical walls in between the different rooms will be provided.

- Ensure that fire escape routes are clearly defined and compliant with local regulations and check that signalization and emergency lighting are aligned with these escape routes:
  - Provide dedicated access doors for emergency evacuation and maintenance (following NBN S 21-208-1 and other relevant Belgian codes).
  - Ensure that emergency exits are clearly marked, unobstructed, and comply with minimum width and height requirements.

4.5.4 Architectural, Civil and structural scope

Consisting simply of a large, elongated space primarily used for electrical equipment, this room is situated above a crawl space. No significant damage requiring immediate action has been reported. Since the crawl space could not be accessed, we are unable to provide a detailed assessment of the condition. However, at first glance, it does not show any visible signs of damage or use. Only one fire compartment is currently identified, there are no partitions in place.

To ensure compliance with BAC standards, the substations (T1, T2) must be segmented in several independent rooms, compartmentalized, equipped with fire-rated structures, and integrated with HVAC systems. Special attention should be given to the crawl space, ensuring proper structural integrity and access.

According to the electrical equipment specifications (dimensions, technical requirements, auxiliary systems), a maximum volume verification must be conducted for each substation, consisting of:

- Side clearances (between walls and transformers): A space of 60 cm to 1 meter is necessary to ensure safe access and ventilation.
- Front and rear clearance: Depending on the type of access and maintenance, this clearance should be 80 cm to 1.5 meters to allow personnel to safely operate and service the equipment.
- Total surface area and volume

Structural and Architectural Adaptations:

- Demolition and Reinforcement
  - Demolition of Non-Compliant or Obsolete Elements:
    - Eliminate obsolete electrical panels and HVAC ducts that do not comply with updated standards.
    - Dismantle any non-compliant insulation materials that pose a fire risk.
  - Structural Reinforcement (depending on slab conditions):
    - Reinforce walls and floors if required for fire resistance, weight capacity of new equipment, or seismic regulations.
    - Evaluate and improve the crawl space’s structural integrity, openings, ensuring it can support new loads.
      - If the equipment requirements are compatible, a metallic base could be considered to reduce slab overload and minimize openings.
- Floor openings for cable passings will need to be carefully scheduled and verified with a structural analysis on feasibility.
- Floor reparations after the dismantling phase

- Access and Ventilation:
  - Access Requirements:
    - Provide dedicated access doors for emergency evacuation and maintenance (following NBN S 21-208-1 and other relevant Belgian codes).
    - Ensure that emergency exits are clearly marked, unobstructed, and comply with minimum width and height requirements.

Technical requirements:

- AS BUILT (to be received from BAC) to verify:
  - Existing boundaries
  - Crawl space dimensions
    - Existing structure and conditions
    - Openings (sleeves under electrical equipment)
- Fire compartmentation:
  - Partition walls EI 1h (TBC)
  - Masonry walls EI 1h (TBC)
  - Emergency exits
  - Doors FR 1h (TBC)
  - Clapets FR
- Maximum volume verification (Synegrid)

Note: we propose to use partition walls (gypsum or sandwich panels) as compartimentation between the different rooms in T1-T2. This is a lightweight solution and will not impact the structural stability of the floor slab but is not compliant with te ressure resistance, required in the SYNERGRID standards. It also adds the advantage of limited dust propagation during the execution of the works.

4.5.5 GTN scope

Reference is made to chapter 5.3.2. From a high level point of view, the scope of the GTN consists of:

- A GTN control cabinet for the control and monitorring of the electrical installation (11kV switchgear, transformers, ALSB's)

- Tie-in on the optical fiber network of the GTN
- Flash beacons to indicated operational status of the network (Normal, Emergency, Priority level)
- An HMI on the control cabinet and one close to the acces door to enable operators to perform remote switching from outside the electrical room.

- Dismantling of the GTE system, excl. lighting control

4.6 Demolition of B4 and T3

The substations B4 and T3 will be completely dismantled only from an electrical point of view. Cable junctions will be performed on the 11kV cables to ensure continuity of the Fill Rouge network.

5 Electrical - Basis of Design

5.1 Norms and Standards

The following standards of the Client are to be respected. Within these standards, references are made to Norms and Regulations:

Standaard ALSB terminal gebouwen.pdf
Standaard Basisontwerp 11kV installaties niet terminal cabines.pdf
Standaard Basisontwerp 11kV installaties terminal cabines.pdf
Standaard Batterijladers 110 VDC voor HS en LS.pdf
Standaard Busbarsysteem 400V (1).pdf
Standaard Busbarsysteem 400V.pdf
Standaard Elektrische Keuringen HS cabines.pdf
Standaard Omschakelaars.pdf
Standaard Tellerkasten 11kV.pdf
Standaard Transformatoren 11kV_400V.pdf
Standaard Voetpadkasten Elektriciteit.docx
Standaard_KNX_Dali.pdf
Standaard_Labeling_Elektriciteit_Kabelbanen.pdf

Figure 4: List Of Electrical Standards

5.2 Preferred suppliers

- Electrical equipment and works: Order for Electrical scope already awarded
- GTN: single source procurement with SDM Projects (To be confirmed)

5.3 Calculation and Design Basis

5.3.1 Description of the current situation

The electrical distribution of the substations is structured as follows:

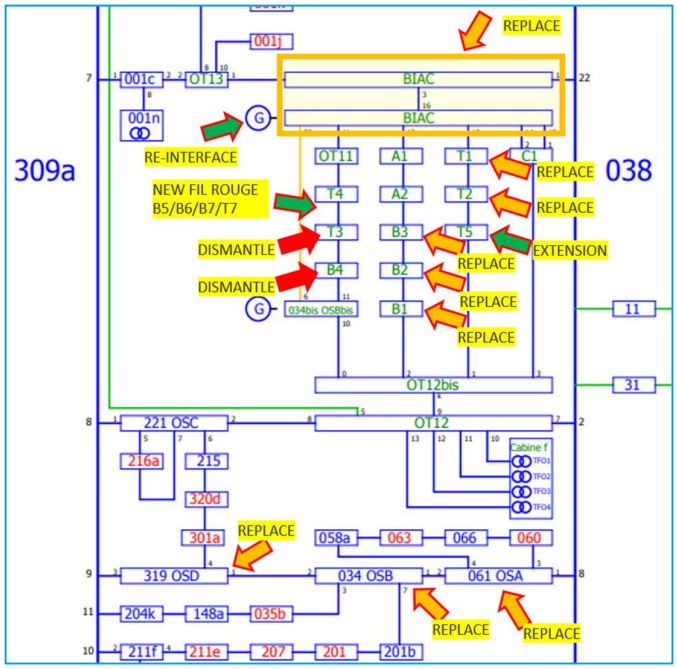

Figure 5: Block diagram of electrical network with identification of project scope

5.3.1.1 Principle Terminal Buildings

- BIAC and OT12 are the central distribution stations for the terminal buildings. They don't have 11/0.4kV transformers or Automatic Load Shedding Breakers (ALSBs) like the other substations.
- Ten standard substations are looped between OT12 and BIAC, operating with logical selectivity as the main protection philosophy, requiring signalization cables between them:
  - A1 – A2 – B3 – B2 – B1
  - T1 - T2 - T5 (expansion of T5 to will be included in the project)
  - C1
- Four "fil-rouge" substations and the OSBbis substation are looped between OT12 and BIAC. They operate closed with logical selectivity as the main protection, requiring signal cables between substations:
  - Fil rouge: OT11 – T4 – T3 – B4
  - Emergency power generators OSBbis: 3 x 2000kVA (Prime) + 1 x 2250kVA (Standby)

Fil-rouge substations have distribution transformers to supply low-voltage consumers during faults or maintenance on the normal substations.

- In substations OSBbis and BIAC, emergency power generators are connected to supply 11kV in the event of a general power outage:
  - OSBbis: 3 x 2000kVA (Prime) + 1 x 2250kVA (Standby)
  - BIAC: 3 x 1600kVA
- The BIAC and OSBbis substations are linked by the "fil jaune," which serves a dual purpose:
  - Synchronization of the emergency power groups across the two substations;
  - Redundant power connection: 6MW of power from OSBbis can be transported via the fil jaune to BIAC and vice versa.

These emergency power generators are equipped to perform load tests, with the 11kV network as the load (synchronization over generator switch), and to perform resynchronization with the network to avoid a second power outage when the network becomes available again.

5.3.1.2 Principle Non-Terminal Buildings

- Substations OSA, OSB, and OSD are loop-cabled between main stations 309a and 38, operating with logical selectivity.
- The substations are monitored and controlled via the GTV system. Since this is a 1-to-1 replacement, the new equipment must connect to the existing interface (mainly modbus for the protection relays). No additional changes to the GTV system are needed for this project.
- Future connection of the protection relay via the IEC61850 protocol will be available. Signals, including open/closed position, fault, high transformer temperature, and motorized switch control, will be wired to terminals in order to enable future connection to the GTG.
- Each substation has 2 low-voltage emergency power generators with individual control systems for power outages. Replacing these generators and control systems is outside the scope of this project.

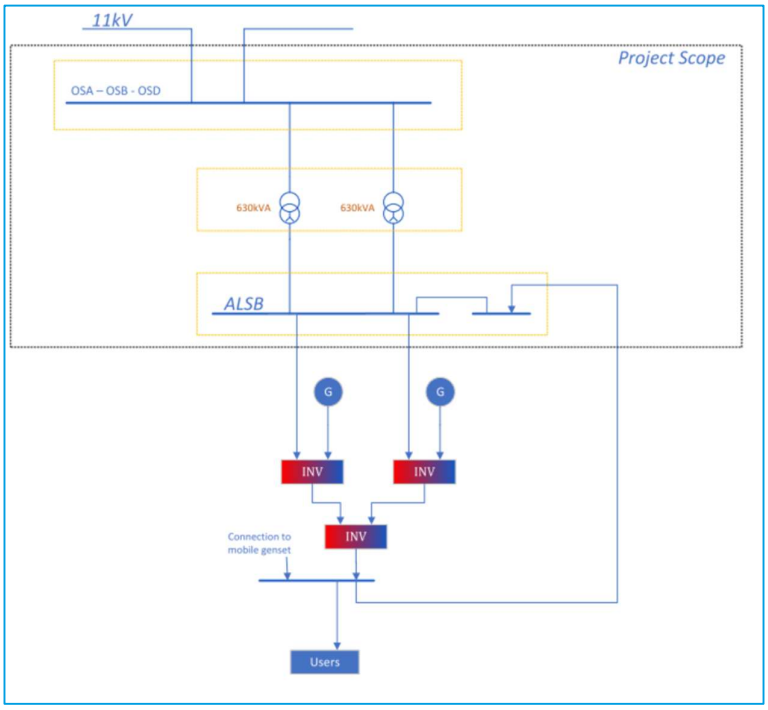

Figure 6: Single line concept for OSA, OSB and OSD

5.3.2 Electrical Management System GTN

This chapter does not apply to substations OS A, OS B, and OS D (= non-terminal buildings). The backup mechanisms in substations OS A, OS B, and OS D have been described in the chapter above and require no further clarification regarding control and monitorring.

This chapter outlines the backup mechanisms and associated control systems for substations **in the terminal buildings.** As a general rule, the electrical installation and associated control system in the Compass building serve as a reference for the new installations in all terminal buildings.

5.3.2.1 General description GTE-GTN

In the event of a power outage on the ELIA grid, the following automatic actions are triggered by the GTN and GTE systems:

<u>GTN control</u>

a) In BIAC and OT12, the incoming network switches are opened.
b) All distribution transformers and low-voltage sections are disconnected ("load shedding"):

- High-voltage switches and incoming breakers on the ALSB's are opened via trip coils based on commands from the GTN.
- Low-voltage switches are opened via undervoltage coils

c) The "fil-jaune" connection is closed.

d) The emergency generators in BIAC and OSBbis are started and synchronized.

e) When sufficient power is available, the distribution transformers are reconnected one by one based on their priority level (1 to 3). First, the primary side is reconnected, followed by the secondary incoming switch at the ALSB.

GTE control

f) The downstream low-voltage sections (+/- 1000 circuit breakers) of the ALSB are divided into 4 priorities:

- Priority 0: No automatic backup by the emergency generators.
- Priority 1: The low-voltage sections remain closed (i.e., they are not opened by the undervoltage coil).
- Priority 2: The low-voltage sections are closed when 4 MW of emergency power is available.
- Priority 3: The low-voltage sections are closed when 5.8 MW of emergency power is available.

The GTE system reconnects the low-voltage sections one by one according to the priorities mentioned above ("restoration"). Subsequently, level 0 consumers can be manually reconnected.

****IMPORTANT – UPGRADE ACCORDING TO THE NEW BAC REDUNDANCY CONCEPT:****

In this project, the new BAC concept will be integrated, in which the low-voltage feeders of the ALSBs to the users will no longer be motorized and will no longer be controlled by the GTE. The GTE system will be fully decommissioned at the airport in the coming years and for the substations within the scope during this project **(excluding the lighting control).**

The outgoing feeders on the ALSBs will consist of non-motorized circuit breakers, with only their positions and fault status being monitored by the GTN. For the control of the 11kV swithgear and the incoming breakers of the ALSB's and the monitoring of the transformers and outgoing feeders on the ALSB's, new GTN control cabinets will be provided as part of the project, where these signals will be linked. These control cabinets will be connected to the communication network of the GTN PLC of the respective substations. Adaptation in the optical fiber network will be performed to enable this connection.

The priority levels will still apply but will now be implemented at the transformer level and therefore the incoming breakers of the ALSB's are motorized and controlled by the GTN. Each substation will include transformers assigned to levels 0 to 3. It will also be permissible to associate a transformer with two consecutive levels if the power balance allows it.

An additional measure to enhance reliability is the installation of a ''fil rouge'' substation next to each substation. This ''fil rouge'' substation will have the necessary connections to the normal substation to provide backup in case of a fault on the 11 kV switches or transformers.

Below is the conceptual diagram for Substation B1 as an illustration. These schematics will serve as the basis for the design.

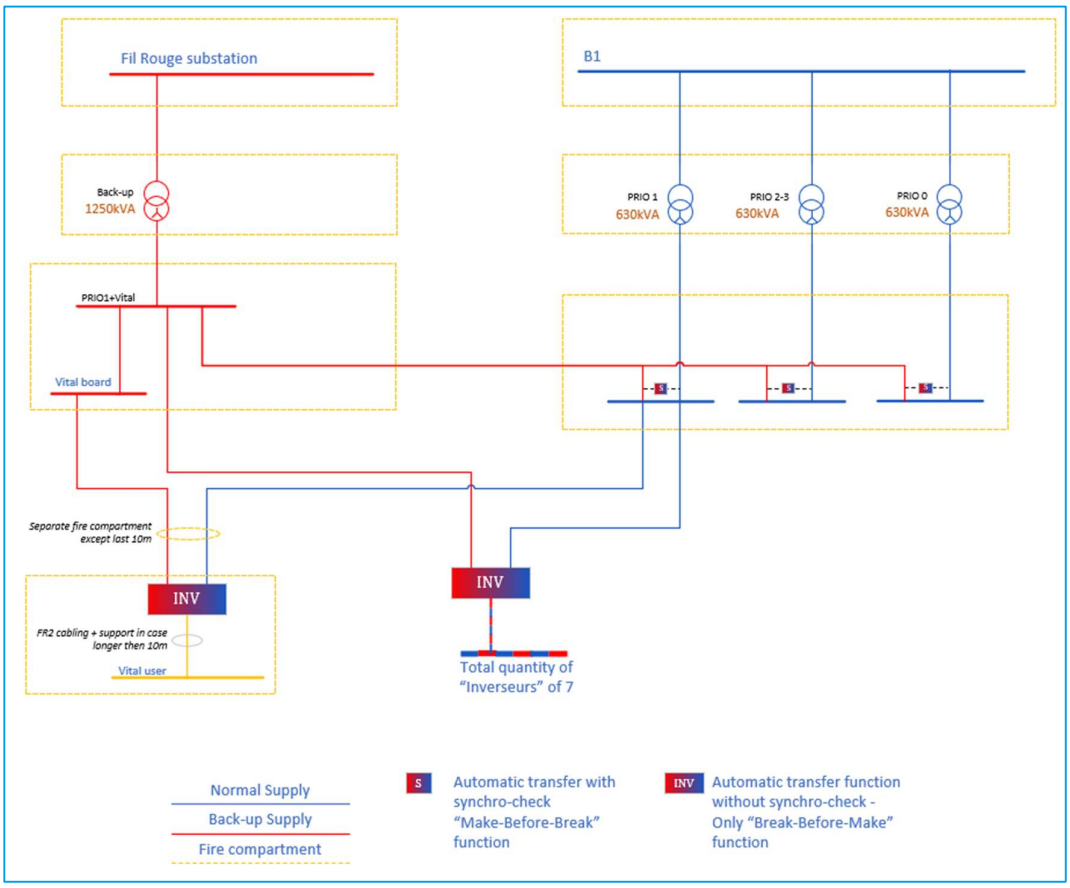

5.3.2.2 Actual **situation**

The GTN control system will already be operational for the 11 kV switches, distribution transformers, low-voltage incoming switches, and low-voltage coupling switches. The following functionalities describe the features and characteristics of the current GTN in the substations:

- Switch control and supervision of the entire 11 kV installation.
- Supervision of the distribution transformers and 110 Vdc charger/battery systems.
- Switch control and supervision of the low-voltage incoming switches and low-voltage coupling switches on the ALSBs.
- Management of all critical signals based on hardwired contacts.
- Use of industrial PLCs (SCHNEIDER MODICON M340) with a separate CPU and control cabinet for each substation.
- Redundant network structure (fiber optic ring).
- Comprehensive visualization and operation available in each substation and at other strategic locations, using touchscreens (Installed in portable cabinet in other to be able to perform switch operations just outside the door of the substation). Visualization software runs on two redundant servers.
- Necessary signal interface with the HIF alarm management system.
- Necessary signal interface with the GTE control system for transmitting priority levels. The GTE uses this signal to control the low-voltage sections that are currently still motorized. This interface will remain operational as long as the substations in Pier A continue to use it.

5.3.2.3 Modifications to perform

The following aspects must be adjusted in this project :

- Modifications to the existing GTN cabinets according to the new configuration of 11 kV switchgear, transformers, and ALSBs in substations BIAC, B1, B2, B3, T1, T2, and T5 (a new control cabinet will be required in the first substation, for others components can be re-used after the evacuation of the first substation).
- Installation and (re)wiring of the current GTN cabinets according to the new configuration of 11 kV switchgear, transformers, and ALSBs in substations BIAC, B1, B2, B3, T1, T2, and T5 (a new control cabinet may be required in T5).
- New GTN control cabinets, light beacons, and flashing lights for the 4 new ''Fil Rouge'' substations B5, B6, B7, and T7.

- New light beacons, flashing lights and HMI's (one on cabinet + one close to the room for save switching outside the room) for the 4 new ''Fil Rouge'' substations B1, B2, B3, and T1 + T2.
- New GTN Remote IO control cabinets for monitoring the low-voltage sections on the ALSBs (hardwired) and downstream switches (Modbus).
- Updates to the programming and SCADA interface.
- Updates to signal communication with HIF and GTE where necessary.
- Relocation and rewiring of the current fiber optic cabinets, GTN control cabinets, light beacons, and flashing lights for the substations where the new installation will be located in a different room (B1, B2, B3).
- Installation, wiring, and assistance during testing for the new GTN control cabinets, light beacons, and flashing lights for the 4 new ''Fil Rouge'' substations B1, B2, B3, and T1 + T2.
- Installation, wiring, and assistance during testing for the new GTN Remote IO control cabinets for monitoring the low-voltage sections on the ALSBs (hardwired) and downstream switches (Modbus).

5.3.3 Priority levels

To be done

5.3.4 Critical- and Safety circuits

The project adopts the configuration of the substation described in the following diagram to enable the compliant installation of vital circuits:

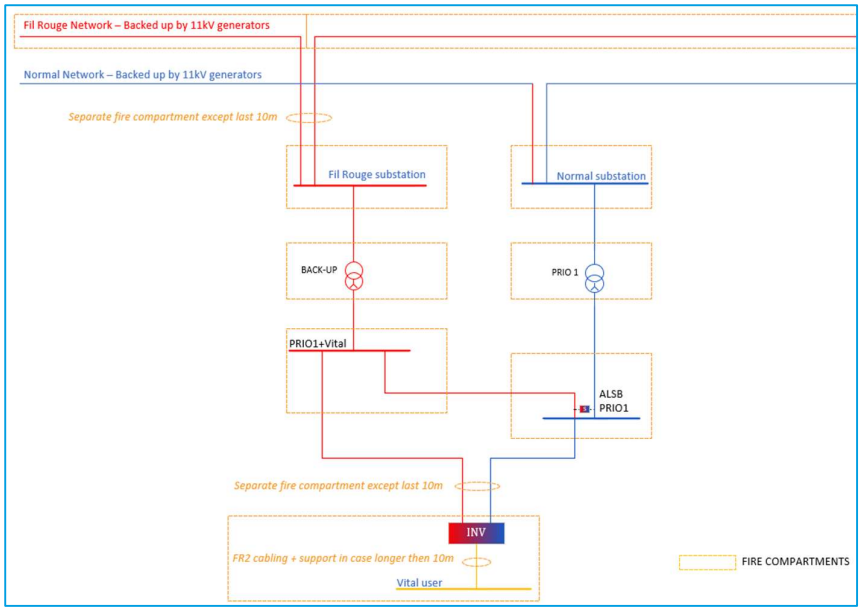

The separation of network cables into different fireproof compartments and the downstream distribution cables, "inverters," and RF wiring for vital users **are not included in the project.**

5.3.5 TN-S Ready switchgear

Figure 7: Single line concept - Critical/Safety circuits

The ALSBs that are ready for the TN-S system have PEN, PE, and neutral busbars available.

During the substation replacement project, three-pole switches will be used, but they can be replaced with four-pole switches when the distribution panel and downstream supply cable are upgraded to a TN-S system. As shown in the following diagram.

Transfer to TN-S users is not included in this project.

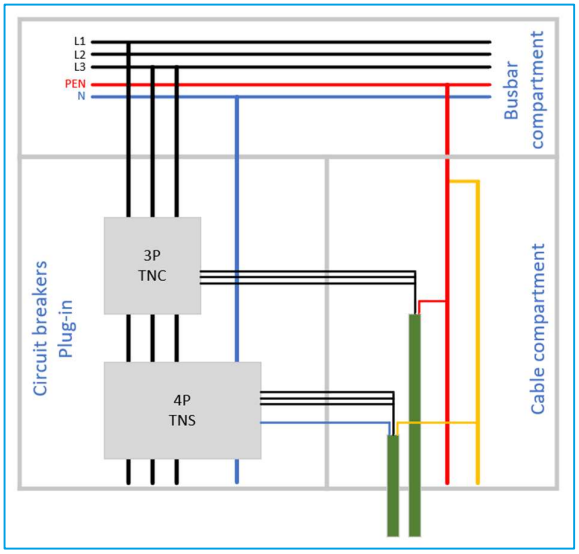

Figure 8: TN-S ready ALSB's (Main Distribution boards)

5.3.6 Calculation basis

To be done (ELECTRI)

5.3.7 Replacement cables

The following cables will be replaced as they can propagate fire and emit toxic fumes:

- EVAVB cables (black color)

The following cables are not planned for replacement:

- XVB cables (grey color)
- XGB cables (green color)
- EmXGB cables (blue color)

6 Architectural and Civil - Basis Of Design

6.1 Norms and Standards

6.1.1 Brussels Airport Standards

No architectural or civil standards received from BAC

6.1.2 Eurocodes (European Structural Standards)

Harmonized European standards for the design and calculation of buildings and civil engineering structures covering aspects such as structural loads, concrete, steel, wood, seismic resistance, and geotechnical engineering. In Belgium, applying the Eurocodes is mandatory to ensure compliance with European standards.

Examples:

- **Eurocode 2 (EN 1992)** – Design of concrete structures.
- **Eurocode 3 (EN 1993)** – Design of steel structures.
- **Eurocode 7 (EN 1997)** – Geotechnical design.
- **Eurocode 8 (EN 1998)** – Earthquake resistance.

6.1.3 Belgian Regulations

Belgian construction regulations are governed by specific national and regional laws. Some applicable laws for this project are:

- Royal Decrees – Several royal decrees regulate fire safety, accessibility, and building energy performance.
- Code du Bien-Être au Travail (Well-being at Work Code) – Covers worker safety and health on construction sites, including fall protection, hazardous materials handling, and emergency procedures.
- Synergrid – Technical specifications for medium and low voltage installations, concerning minimum clearances, ventilation, structural requirements and safety requirements.
- AREI – sets requirements for space, ventilation, and minimum distances.

6.1.4 Airport-Specific Standards

Potentially, the renovations in the airport must comply with aviation-specific regulations. (To be confirmed which are applicable on the project)

- International Civil Aviation Organization (ICAO)
  - *Example*: ICAO Annex 14 covers standards for airport design, including runway lighting and safety zones.
- European Union Aviation Safety Agency (EASA)
  - *Example*: If a renovation affects airport operations (such as air traffic control tower modernization), EASA certification is required.
- Federal Public Service (FPS) Mobility and Transport (Belgium)
  - Regulates Belgian aviation safety.
  - Ensures compliance with European airport infrastructure laws.

6.1.5 Accessibility

- Accessibility Rules
  - Example: Any terminal renovation must ensure wheelchair accessibility, with proper door widths and elevator dimensions according to Belgian Royal Decrees.

6.2 Preferred suppliers

Airport Airside contractors:

- Colas
- Viabuild
- Besix
- Stadsbader
- Willemen
- Renotec

Construction works (not yet airside):

- Cordeel
- Willy Naesens

Potential contractors:

- Jan De Nul

6.3 Assumptions

The substations will undergo upgrades and improvements in technical areas. To achieve this, certain adaptations or remediations may be necessary to ensure the proper execution of the work.

From an architectural, civil engineering, and structural perspective, efforts will primarily focus on ensuring compliance with current regulatory standards, as well as maintaining the proper condition and functionality of the installations.

Some demolition and minor modifications may be required, both for the removal of existing elements and the installation of new equipment and infrastructure.

7 HVAC & Utilities - Basis Of Design

7.1 Norms and Standards

7.1.1 Brussels Airport Standards

Only the electrical standards have been received in which temperature ranges and technical solutions are proposed but misaligned with the requests from the SPOC of BAC (see chapters 4.2.3, 4.4.2 and 4.5.2).

7.1.2 Belgium Norms and Standards

- NBN EN 61439-1
- NBN EN 61439-6
- NBN S 21-208-1
- NBN S 21-208-3
- Code of Well-being at Work (Codex)
- Eurovent 6/12
- NBN EN 1366

7.2 Preferred suppliers

Identified preferred brands :

- Air handling units : TROX, Munters, Robatherm, Fläktgroup
- Controllers : IMI
- Fire dampers : TROX, RFT
- Pumps : Grundfos
- Diffusers : TROX
- Automation : Honeywell EBI

Exhaustive list will be built during the Basic Design.

7.3 Calculation and Design basis

- Summer outside conditions : 35°C /50%RH
- Winter outside conditions : -8°C/90%RH
- Inside acceptable conditions : 4 to 45°C (To be confirmed as not aligned with the BAC Electrical standards).
- Inside acceptable humidity : ???°C.

7.4 Assumptions

The HVAC design will depend on the equipment installed inside the rooms. The ventilation rates or cooling capacities will all be calculated, based on the thermal loads within the room. In certain periods (heatwaves or winter), conditions will not be suitable for long-term work in case the cooling of the room is solely provided by ventilation (as requested in Pier B substations and OSA-OSB-OSD).

Other assumptions are integrated in chapters 4.2.3, 4.3.2, 4.4.2 and 4.5.2.

8 Fire protection – Basis Of Design

8.1 Norms and Standards

8.1.1 Brussels Airport Standards

No standards received from BAC

8.1.2 Applicable norms and standards

Renovation comply with **fire safety and accessibility regulations**. Below are some key organizations and regulations:

- Fire Safety Standards (NBN S21-100, NBN EN 1366, and NBN EN 13501-2)
- Code wellbeing at work (Codex)
- Royal Decree of 7 July 1994 laying down the basic standards for the prevention of fire and explosion to be met by buildings.
- NBN S 21-100: Fire detection and fire alarm systems
- Standard series : NBN EN 12101 Smoke and heat control systems
- NBN EN 1838 Lighting applications - Emergency lighting for buildings
- ISO 3864-1: Graphical symbols — Safety colours and safety signs — Part 1: Design principles for safety signs and safety markings
- NBN EN 54 series: Fire detection and fire alarms
- NBN EN IEC 60598-2-22:2022: Luminaires - Part 2-22: Particular requirements - Luminaires for emergency lighting

8.2 Preferred suppliers

- Modifications on fire detection: To be confirmed by BAC
- Modifications on sprinkler systems: To be confirmed by BAC
- Modifications on the smoke extraction systems in T1-T2: To be confirmed by BAC
- Wall- and floor penetration seals: To be confirmed by BAC